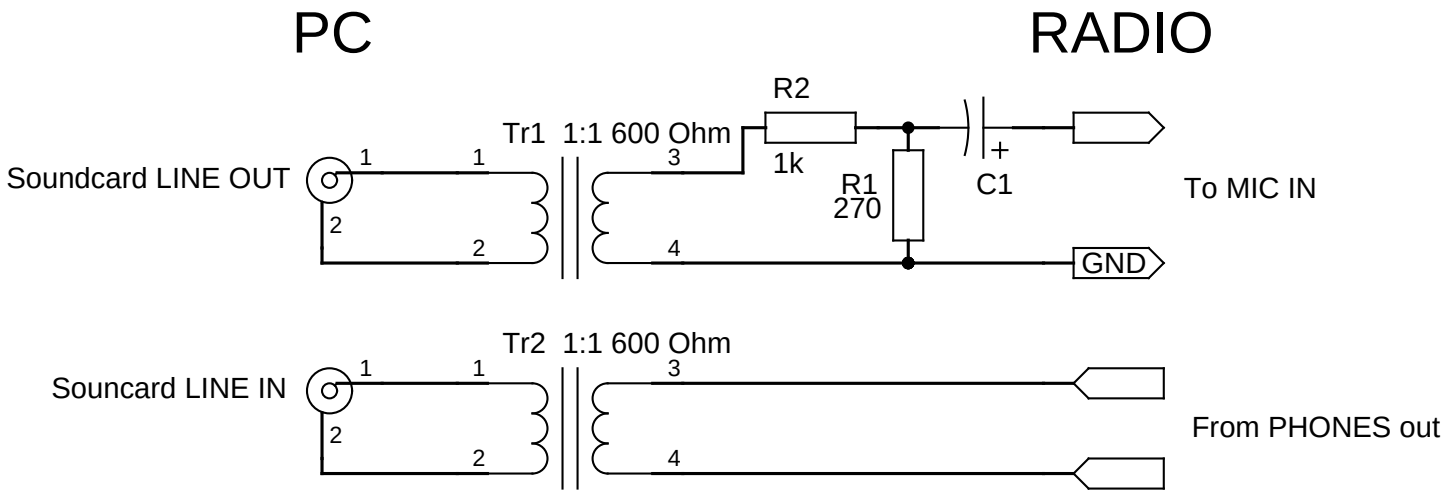Interface for ssbd